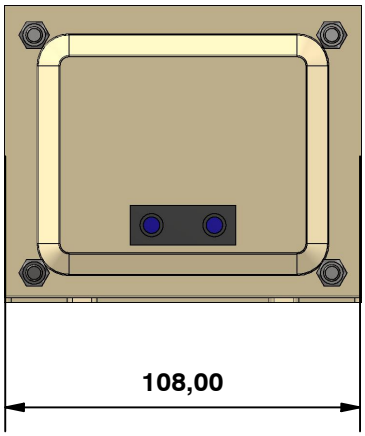

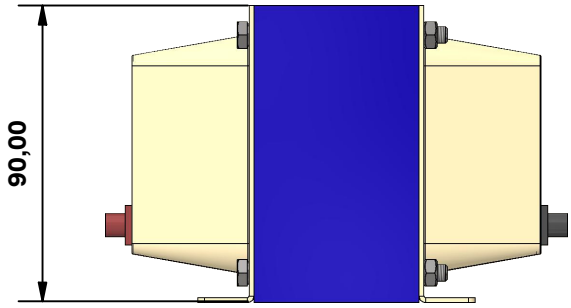

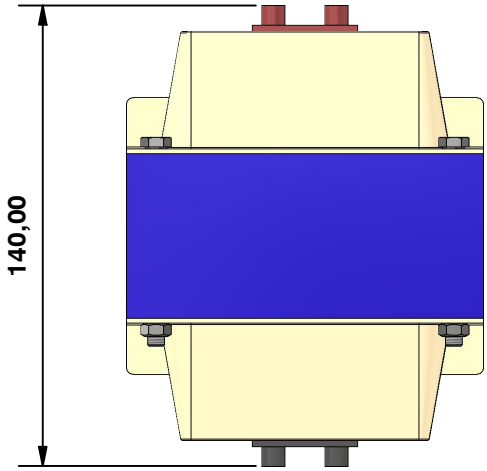

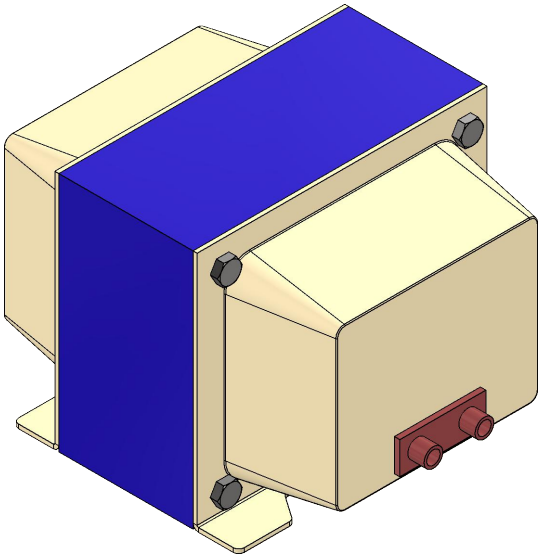

TECHNICAL DATA	
According Standard	EN-61.558-2-13
Rated Power	1000 VA
Primary Voltage	110/240V
Secondary Voltage	110/240V
Frequency	50/60 Hz
Protection Grade	IP-20
Isolement Level	F
ED:	100%
ta	40ºC
Class	I
Strength Dielectric test between live parts	-
Strength Dielectric test between live parts and mass	2.750V
Data Plate	Yes
Electrostatic screen	Non
Wound wires	Aluminium wire G-2 class H
Magnetic Core	Non oriented grain, cold lamination. M 330-50A EN10106
Bobbin	PA6 + Glass Fiber (30%)
Type Refrigeration	Dry
Connection	-
Terminal block	European connection (PRI) European connection (SEC)
Weight	3,4 Kg.

Drew by:	Approved by:
Miguel A. Hdez. - 21/11/2023	Victor Gallego - 21/11/2023

STEP UP-DOWN I-PHASE AUTOTRANSFORMER

Units: mm.

ARB02210061

manumag

Page 1 de 1
Rev: 01
Rev date.: 21/11/2023

MANUMAG SL - C/Antonio Barriendos s/n, Pol. Ind. Las Norias
50450-MUEL, SPAIN - VAT ESB50040146
Tel +34 976 140606 - Fax +34 976 140 607
comercial@manumag.com, export@manumag.com