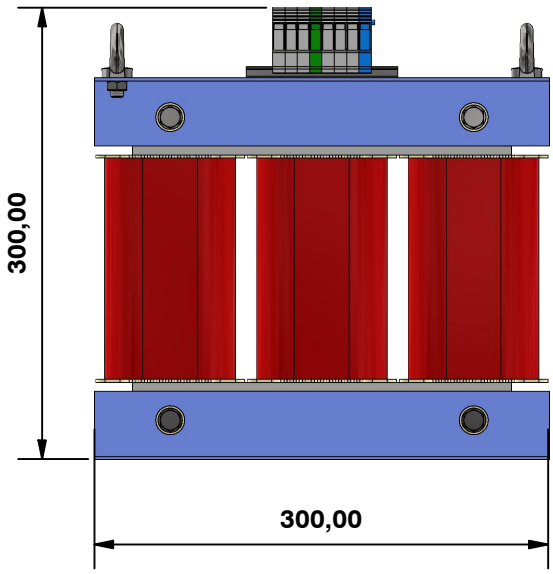

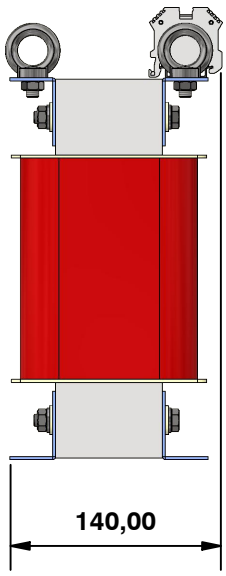

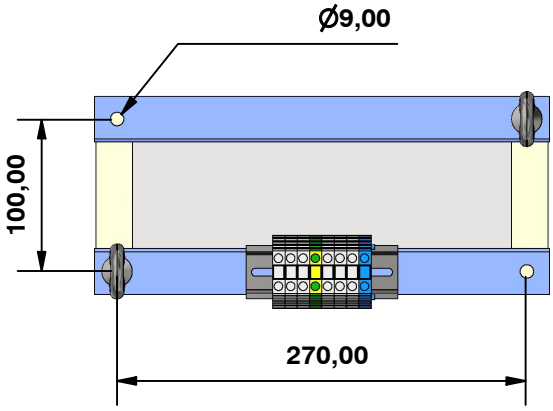

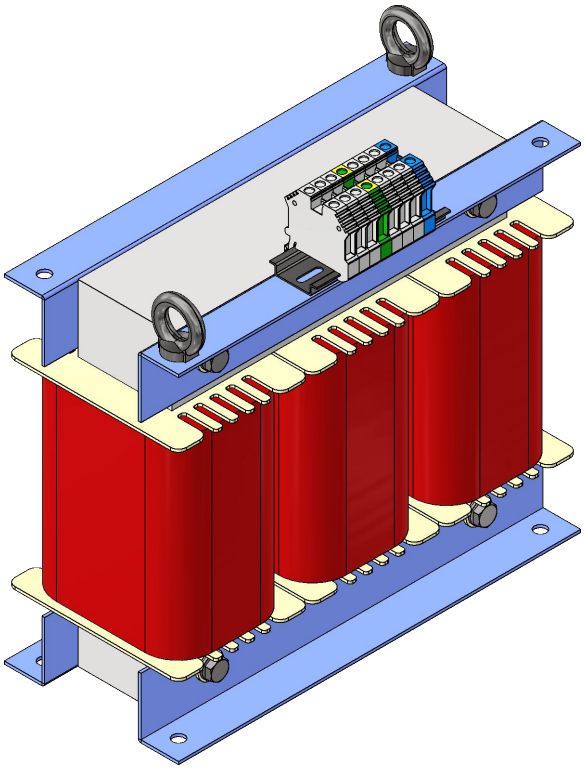

TECHNICAL DATA	
According Standard	EN-61.558-2-4
Rated Power	5 KVA
Primary Voltage	400V
Secondary Voltage	230V+N
Frequency	50/60 Hz
Protection Grade	IP-00
Isolement Level	F
ED:	100%
ta	40ºC
Class	I
Strength Dielectric test between live parts	4.600V
Strength Dielectric test between live parts and mass	2.300V
Data Plate	Yes
Electrostatic screen	Non
Wound wires	Cooper wire class H
Magnetic Core	Non oriented grain, cold lamination. M 330-50A EN10106
Bobbin	PA6 + Glass Fiber (30%)
Type Refrigeration	Dry
Connection	Dyn
Terminal block	CONTACLIP 10mm (PRI) CONTACLIP 10mm (SEC)
Weight	40 Kg.

Drew by:	Approved by:
Miguel A. Hdez. - 10/11/2023	Victor Gallego - 10/11/2023

THREE PHASE ISOLATION TRANSFORMER

Units: mm.

YA002505460

Page 1 de 1
Rev: 01
Rev date.: 10/11/2023

MANUMAG SL - C/Antonio Barriendos s/n, Pol. Ind. Las Norias
50450-MUEL, SPAIN - VAT ESB50040146
Tel +34 976 140606 - Fax +34 976 140 607
comercial@manumag.com, export@manumag.com